POWER TETRODE 4CX15000J/8910

SHORT FORM SPECIFICATION

Plate Dissipation (Max.)	15000 W
Screen Dissipation (Max.)	450 W
Grid Dissipation (Max.)	200 W
Frequency for Max. rating (CW)	110 MHz
Amplification Factor	4,5
Filament/Cathode	Thoriated Tungsten
Voltage	7,5 V
Current	158,0 A
Capacitance	Grounded Cathode
Input	160,5 pF
Output	26,5 pF
Feed through	1,5 pF
Capacitance	Grounded Grid
Input	67,0 pF
Output	27,5 pF
Feed through	0,2 pF
Cooling	Forced Air
Base	Special Coaxial
Air Socket	SK-300A
Air Chimney	SK-316
Length	9,38 in; 238,00 mm
Diameter	7,58 in; 193,00 mm
Weight	12,8 lb; 5,80 kg
Operating Position	Vertical

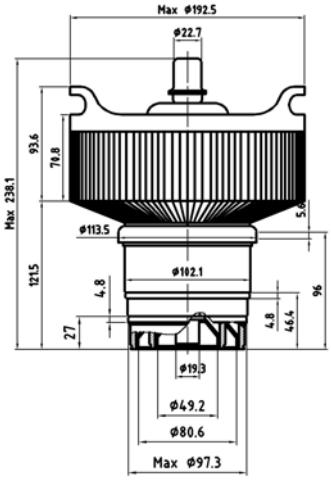

Class of Operation	Type of Service	Maximum Ratings: Plate Voltage (Volts)	Maximum Ratings: Plate current (Amps)	Typical Operation: Plate Voltage (Volts)	Typical Operation: Screen Voltage (Volts)	Typical Operation: Plate Current (Amps)	Typical Operation: Drive Power (Watts)	Typical Operation: Output Power (Watts)
C	RF Amplifier	10000	5,0	10000	750	4,6	220	36500
C	RF Amplifier Plate Modulated	8000	4,0	8000	750	3,7	150	23500
AB1	RF Amplifier Plate Modulated	10000	4,0	7500	1250	2,9	----	12000
AB1	AF Amplifier or Modulator (2 tubes)	10000	6,0	10000	1500	8,5	----	57000

TUNGSTEN VACUUM ELECTRONICS

Factory: H-2120 Dunakeszi Rétipálya

Tel : (36)-27-546-570
Fax : (36)-27-546-571

E-mail: Info@tungsten.hu
Web: www.tungsten.hu